CKTS	PART NUMBER	PARTS PER BAG	BAGS PER CARTON	SPQ
2	2004531002	2200	1	2200
3	2004531003	1600	1	1600
4	2004531004	1500	1	1500
5	2004531005	1200	1	1200
6	2004531006	1100	1	1100

P/N	Description	Qty
309073001	AIAG CARTON 11.75 X 11 X 4.5 O.D	1
313006440	15 X 9 X 24 X .003" ANTI-STATIC LDPE BAG	1
46996-2011 OR 885961016	YELLOW SORBENT CLOTH	1
46996-2010 OR 885960969	VENTED ZIP LOCK BAG	1

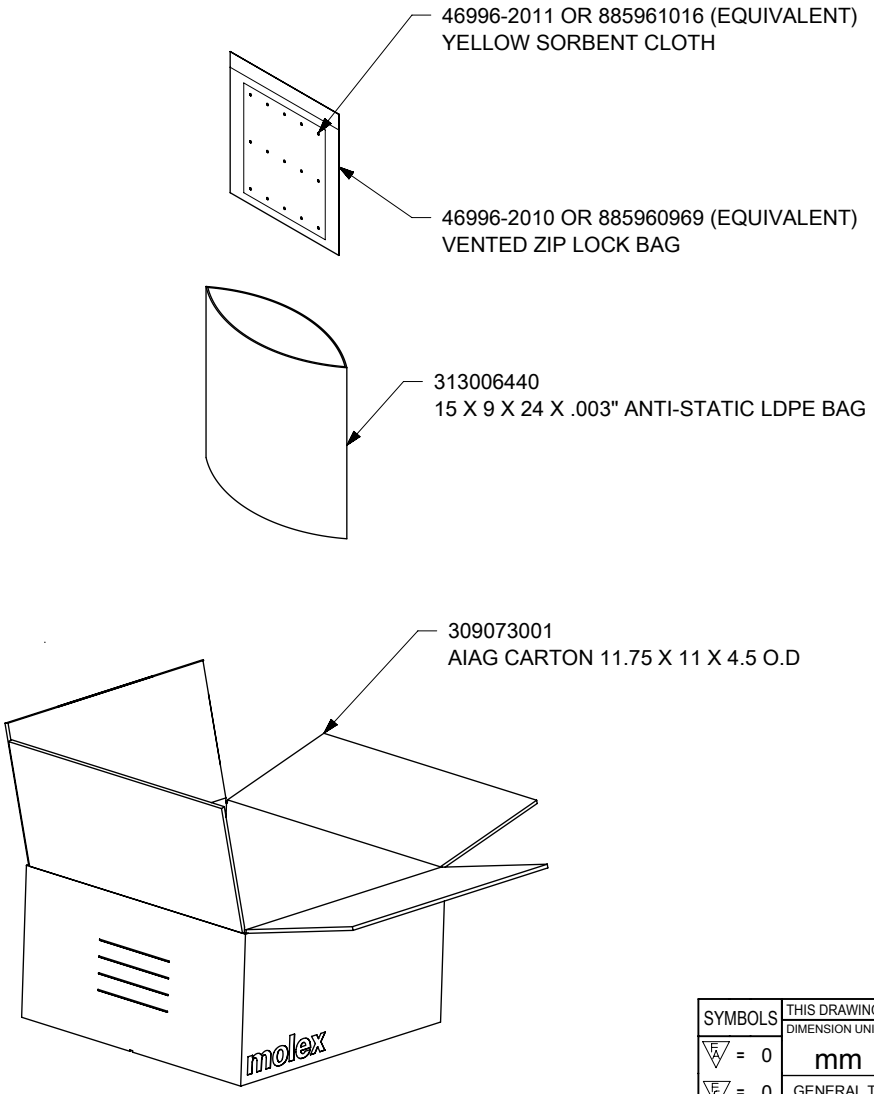

NOTES - PACKAGING PROCEDURE

1. PARTS TO BE MOISTURIZED PER AS-45499-001
2. WATER IS TO BE ADDED TO THE 46996-2011 (885961016) PAD THAT IS INSIDE A 46996-2010 (885960969) BAG.
3. FOLD AND TAPE BOTTOM FLAPS OF CARTON WITH 2" WIDE TAPE PER ES-40000-7013. TAPE SHOULD EXTEND UP SIDES OF CARTON AT LEAST 76 MM (3 INCHES).
4. POLYBAGS TO BE FILLED WITH QUANTITY OF PARTS AS SPECIFIED PER CHART.
5. CLOSE TOP FLAPS OF CARTON AND TAPE. TAPE SHOULD EXTEND DOWN SIDES OF CARTON AT LEAST 76 MM (3 INCHES).
6. ADD LABELS TO CARTONS AS REQUIRED PER ES-40000-7012.
7. FOR LARGER SHIPMENTS CARTONS MAY BE LAYERED ON A 1200 X 800 PALLET WITH (6) CARTONS PER LAYER AND A MAXIMUM OF (4) LAYERS.
8. CARTONS ON PALLET TO BE UNITIZED WITH BANDING AND STRETCH FILM PER PK-31301-625.

SYMBOLS: FA = 0, FC = 0, FP = 0, S = 0, ▼ = 0, C = 0, ☒ = 0, ■ = 0, C = 0

THIS DRAWING CONTAINS INFORMATION THAT IS PROPRIETARY TO MOLEX ELECTRONIC TECHNOLOGIES, LLC AND SHOULD NOT BE USED WITHOUT WRITTEN PERMISSION

DIMENSION UNITS	SCALE
mm	

GENERAL TOLERANCES (UNLESS SPECIFIED)

ANGULAR TOL	± °
4 PLACES	±
3 PLACES	±
2 PLACES	±
1 PLACE	±
0 PLACES	±

DRAFT WHERE APPLICABLE MUST REMAIN WITHIN DIMENSIONS

CURRENT REV DESC:

EC NO: 628028
DRWN: ALUO02 2019/09/18
CHK'D: YXZHENG 2019/12/02
APPR: YXZHENG 2019/12/02

INITIAL REVISION:
DRWN: ALUO02 2019/09/18
APPR: YXZHENG 2019/12/02

THIRD ANGLE PROJECTION | DRAWING: A4-SIZE | SERIES: 200453

molex

PK DRAWING OF MINI-FIT SIGMA S/R REC.

PACKAGING DESIGN DRAWING

DOCUMENT NUMBER	DOC TYPE	DOC PART	REVISION
2004531000-PK	PDD	000	A

MATERIAL NUMBER	CUSTOMER	SHEET NUMBER
	GENERAL MARKET	1 OF 1

DOCUMENT STATUS	P1	RELEASE DATE	2019/12/02 12:44:26

FORMAT: master-tb-prod-A4
REVISION: H
DATE: 2018/01/18